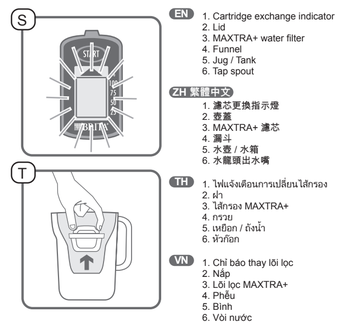

EN
1. Cartridge exchange indicator
2. Lid
3. MAXTRA+ water filter
4. Funnel
5. Jug / Tank
6. Tap spout

ZH 繁體中文
1. 濾芯更換指示燈
2. 壺蓋
3. MAXTRA+ 濾芯
4. 漏斗
5. 水壺 / 水箱
6. 水龍頭出水嘴

TH
1. ไฟแจ้งเตือนการเปลี่ยนไส้กรอง
2. ฝา
3. ไส้กรอง MAXTRA+
4. กรวย
5. เหยือก / ถังน้ำ
6. หัวก๊อก

VN
1. Chỉ báo thay lõi lọc
2. Nắp
3. Lõi lọc MAXTRA+
4. Phễu
5. Bình
6. Vòi nước

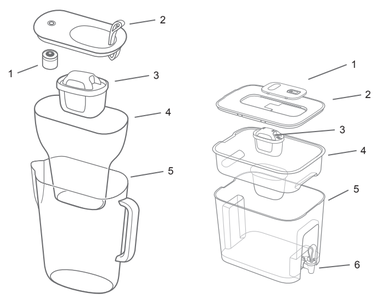

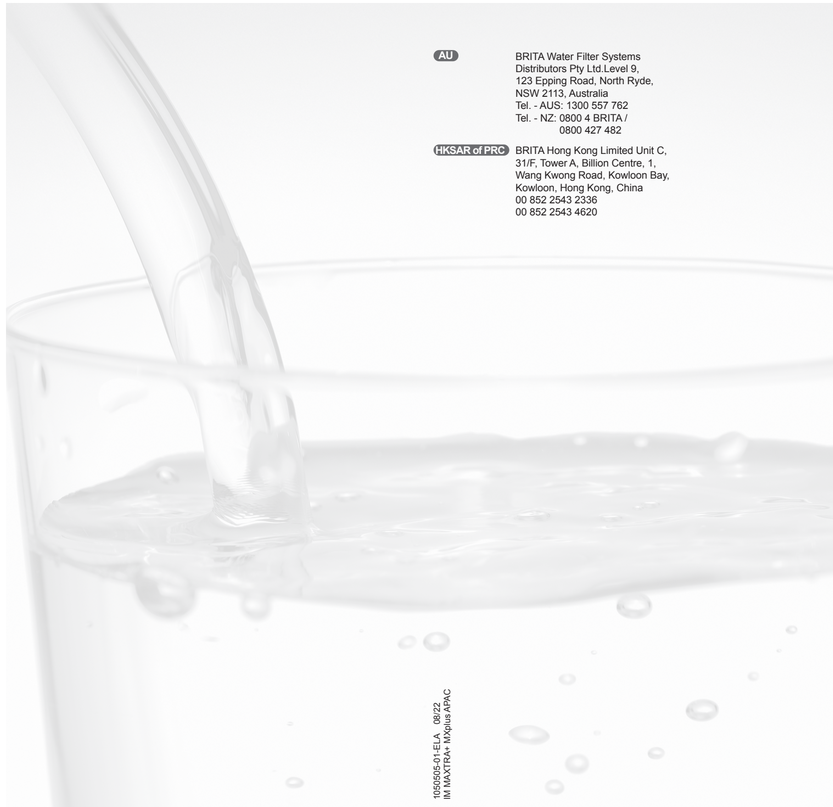

1050505-01-ELA_ GA/ 08/22
IM MAXTRA+ MXplus APAC

AU
BRITA Water Filter Systems
Distributors Pty Ltd.Level 9,
123 Epping Road, North Ryde,
NSW 2113, Australia
Tel. - AUS: 1300 557 762
Tel. - NZ: 0800 4 BRITA /
0800 427 482

HKSAR of PRC
BRITA Hong Kong Limited Unit C,
31/F, Tower A, Billion Centre, 1,
Wang Kwong Road, Kowloon Bay,
Kowloon, Hong Kong, China
00 852 2543 2336
00 852 2543 4620

EN

I. Thank you for choosing BRITA quality for cleaner, fresher tasting water.

The innovative BRITA MicroFlow Technology within MAXTRA+ ensures a much more powerful water filtration:

- The small Micro Carbon Pearls are made from carbon natural coconut shells. Thanks to the BRITA MicroFlow Technology taste and odour impairing substances, such as chlorine, are effectively locked away in millions of pores within the Micro Carbon Pearls of the filter.
- Ion-Exchange Pearls ensure powerful limescale reduction for reliable protection of kettle or coffee machine.*
- Effective reduction of metals such as lead and copper that may be present in your water from older plumbing. For cleaner, fresher tasting water* in your hot and cold drinks and for cooking.

*This water filter is tested for lead, copper, chlorine and carbonate hardness according to DIN EN 17093:2018.

The contaminants or other substances removed or reduced by this water treatment system are not necessarily present in your water.

MAXTRA+ FlowControl: perfect filtration

MAXTRA+ FlowControl ensures the perfect filtration time for best results through the combination of the MAXTRA+ water filter and the funnel of the BRITA water filter jug.

Lifetime of the MAXTRA+ water filter

MAXTRA+ water filter life depends on local water quality, such as water hardness.

The MAXTRA+ water filter filters up to 150 litres.*/**

*Performance depends on the type of water filter.

To ensure optimum performance you should change your MAXTRA+ water filter every four weeks. To remind you of the next water filter change, your BRITA water filter jug is equipped with a filter exchange indicator.

**Limescale is certified to be reduced for 120l according to DIN 17093:2018.

Over 50 years of experience is a guarantee of quality

For over 50 years, BRITA has stood for constant innovation and the highest quality of water filter solutions. To reach high quality requirements at BRITA there are stringent internal and external quality controls. The independent and renowned TÜV SÜD controls the consistent quality of household water filter jugs and water filter on a regular basis. TÜV SÜD certifies the food grade quality of BRITA water filter jugs and the MAXTRA+ water filter according to German and European legislation.

100% satisfaction: the BRITA guarantee

BRITA is convinced that this product will satisfy your demands for quality and performance. If you are not completely satisfied with your BRITA product, BRITA guarantees to give you your money back within 30 days from date of purchase. Please send the water filter together with the receipt, reason for return, your full name, telephone number and your bank info to your local BRITA customer service which is listed on the back page.

30 Days Money Back Guarantee

II. Quality from the very start

To ensure that you get the best results from your BRITA water filter jug, please follow the instructions carefully.

1 Cleaning instructions for your new BRITA water filter jug before first use and after every water filter exchange

Funnel and jug

Dishwasher safe (max. 50 °C) except BRITA Flow.

Please clean your BRITA Flow only by hand with cold or lukewarm water.

If your BRITA water filter jug has been in contact with food that is likely to cause discolouration (e.g. tomato ketchup, mustard) clean your BRITA water filter jug. To avoid possible discolouration of your BRITA water filter jug, do not include it in a dishwasher containing dirty crockery from such foods.

Lid with BRITA Smart Light A1

Before cleaning the lid in the dishwasher please remove the BRITA Smart Light from the lid by turning it anti-clockwise. A1

The removed BRITA Smart Light must not be washed in the dishwasher. After removal clean the BRITA Smart Light by hand using a soft and damp cloth. After cleaning the lid simply insert the BRITA Smart Light back into the lid by turning it clockwise as far as it will turn. A2

Lid with BRITA Meter B

Before cleaning the lid in the dishwasher please remove the BRITA Meter from the lid. Press the two tongues on each side of the BRITA Meter and tilt the BRITA Meter back towards the handle cover for complete removal. The removed BRITA Meter must not be washed in the dishwasher. Clean the removed BRITA Meter by hand.

Lid with non removable BRITA Memo S

The lid must not be washed in the dishwasher. Clean the lid by hand.

BRITA water filter with a tap spout C

Please pass warm water through the tap spout, and you may wipe it internally with a cotton bud or similar. Please hand tighten the union nut in order to ensure that leaks are prevented. The tap can be easily disassembled by screwing off the cap located under the lever and then cleaning the spout and components.

TIP
Please use mild detergents but no abrasive cleaners. For descaling the lid, BRITA Meter and the BRITA Smart Light use common household citric acid based descaling fluids.

2 Preparation of the MAXTRA+ water filter D

For quality you can trust: BRITA hot steam treatment for ultimate hygiene in every MAXTRA+ water filter. Remove the protective wrapper from the MAXTRA+ water filter (Note: The MAXTRA+ water filter may be damp from steam treatment process). Fill the clean jug with cold water. Immerse the MAXTRA+ water filter in cold water and shake it gently to remove any air bubbles. Remove the MAXTRA+ water filter and discard the used water.

3 Insert the MAXTRA+ water filter E

Insert the funnel into the jug. Place the MAXTRA+ water filter into the hollow of the funnel and push downwards until it is positioned firmly.

4 Filling of the BRITA water filter jug

The filling method depends on the features in the lid of your BRITA water filter model. The water in the funnel is automatically filtered and flows into the jug.

Variants of the lid

BRITA water filter with automatic pour through lid

If your BRITA water filter features a BRITA Meter please turn the lid on its back and insert the BRITA Meter into the lid. Put the hook under the "START" button into its assembly jig in the lid. Tilt the BRITA Meter forward until it "clicks" firmly into place. F

Hook the lid in its assembly jigs into the jug and press it down towards the handle. G

Fill your BRITA water filter directly under the tap with cold water. The stream of tap water activates the automatic pour through lid. The pour through lid closes automatically when the maximum filling level has been reached. H

Variants of the lid

BRITA water filter jug with flip top lid I

Carefully press the lid onto the jug until it is in place. Open the flip top lid and place the opening under the tap. Fill your BRITA water filter jug directly under the tap with cold water.

BRITA water filter jug without pour through opening J

Remove the lid and fill the funnel with cold tap water. Press the lid onto the jug until it is in place.

5 Activate the MAXTRA+ water filter K

The MAXTRA+ water filter must be activated with the first two fillings. Discard the first two fillings or use the water for your plants. With the third filling the MAXTRA+ water filter jug is ready for use – you will enjoy cleaner, fresher tasting BRITA filtered water. In case that carbon particles are released please rinse the funnel and insert the water filter again. For detailed information about particles please see paragraph "Natural traces" under "Important notes".

6 Water filter exchange indicator adjustment

Your BRITA water filter exchange indicator will prompt you when you need to change the MAXTRA+ water filter. The indicator is in the lid of your BRITA water filter jug. BRITA recommends the exchange of your MAXTRA+ water filter at least every four weeks to ensure optimum filtration performance.

Variants of the lid

BRITA water filter jug with BRITA Smart Light L

The BRITA Smart Light ensures that you can enjoy cleaner, fresher tasting BRITA filtered water all the time. It monitors the filtration performance and indicates intuitively when to change the cartridge for optimum filtration performance. Using an intelligent sensor it not only measures the time since the last water filter change but also takes the volume used into account. For activation before first use and after every change of the MAXTRA+ water filter, press the BRITA Smart Light LED reset button for approximately 5-10 sec M until the LED light is fading green in and out three times. N Your water filter jug is now ready to use.

During every use of the water filter jug the BRITA Smart Light will prompt you whether it is time to change the cartridge through different coloured flashing lights.

Green light: MAXTRA+ water filter filters with optimum performance.

Yellow light: it is nearly time to replace your water filter soon, please stock up.

Red light: please exchange your water filter. This will be the case after either 4 weeks or 100L of filtered water usage assuming a typical pouring flow.*

*Performance depends on the type of water filter.

You can monitor the status of your filtration performance any time. Simply press on the BRITA Smart Light with your finger to see the actual filter status. M N

BRITA water filter with BRITA Memo O

Always enjoy cleaner, fresher tasting BRITA filtered water thanks to the intelligent BRITA Meter. BRITA Meter monitors the filtration performance and indicates the remaining cartridge life. The 3-way measurement takes into consideration the volume of water filtered, water quality (hardness) and time.

After activating the MAXTRA+ water filter, please remove protective foil from BRITA Meter display and press "START" button for approx. six seconds until all four bars appear in the display. Release the button as soon as the display starts flashing. P

As long as your display shows "O.K." the MAXTRA+ water filter filters with optimum performance. The percentage in each bar of your display indicates the remaining capacity of your MAXTRA+ water filter. Water drops that recurrently flash from top to bottom indicate an actively processing filtration. If the empty water filter symbol "NEW" flashes, you should now exchange the MAXTRA+ water filter. Q

BRITA water filter jug with Memo R S

The BRITA Memo reminds you to change your MAXTRA+ water filter every four weeks. After activating the MAXTRA+ water filter, please remove protective foil from Memo display and press the "START" button until all four bars appear in the display and flash twice. A small flashing dot at the bottom right corner of the display shows the BRITA Memo is working. Each bar refers to a lifetime of approx. one week. The recommended MAXTRA+ water filter life of four weeks equals four bars or 100%. After each week one bar will disappear to show the remaining MAXTRA+ water filter life. Change the MAXTRA+ water filter when all the bars have disappeared and the arrow starts to flash.

7 Exchange of the MAXTRA+ water filter T

Pull the MAXTRA+ water filter out. Follow the instructions for "Quality from the very start" from step 1 to 6.

III. Important notes

Do not expose your BRITA water filter jug to direct sunlight. Keep your BRITA water filter jug away from heating elements, e.g. oven, coffee machine. Store your BRITA water filter jug in a shady, cool place.

BRITA filtered water is dedicated for human consumption only. It is a perishable food and as such please consume it within one day.

Ensure that you have a new MAXTRA+ water filter ready for exchange. BRITA recommends to store your MAXTRA+ water filter in their original wrapping in a cool and dry place.

Over the lifetime of the BRITA water filter jug you may notice limescale build-up on the lid and the automatic pour through lid. This is due to the fact that it always comes into contact with unfiltered water, which contains carbonate hardness (limescale). BRITA recommends that you clean and descale your lid, the BRITA Smart Light, the BRITA Meter and the automatic pour through lid on a regular basis with common household citric acid based descaling fluid. In case you drop the BRITA Smart Light please check for any damages and replace, if damages are visible. Disposal should follow all applicable provisions and regulations. Please keep the BRITA Smart Light out of the reach of children (risk of swallowing). Should your BRITA water filter jug not be in use for a prolonged period (e.g. holiday), BRITA recommends that you take out the MAXTRA+ water filter, discard any water left inside the BRITA water filter jug and loosely insert the MAXTRA+ water filter again. Before using the BRITA water filter jug again take out the MAXTRA+ water filter, clean the water filter and repeat steps 3 to 5 of the „Quality from the very start". Please pay special attention to your BRITA water filter exchange indicator. If your BRITA water filter jug has been in contact with food that is likely to cause discolouration (e.g. tomato ketchup, mustard) clean your BRITA water filter jug. To avoid possible discolouration of your BRITA water filter jug, do not include it in a dishwasher containing dirty crockery from such foods. If you note in case of a BRITA water filter jug with a tap spout any water seepage between the tap assembly and the body of the tank, simply tighten the hexagonal nut inside the tank.

Optimum performance

Please filter cold tap water only.

In the event: filter first, and then boil

BRITA water filter jugs are designed for use only with municipally treated tap water (note: this water is constantly controlled and according to legal regulations safe to drink) or with water from private supplies which has been tested as safe to drink. If an instruction is received from the authorities that mains water must be boiled, then BRITA filtered water must also be boiled. When the instruction to boil water is no longer in force, the entire BRITA water filter jug must be thoroughly cleaned and a new MAXTRA+ water filter inserted. For certain groups of people (e.g. those with impaired immunity and for babies), it is generally recommended that tap water should be boiled; this also applies to BRITA filtered water. Irrespective of the water used, you should use utensils with stainless steel or kettles with concealed elements. In particular, people who are sensitive to nickel should use appliances made of stainless steel or kettles with concealed elements.

Ultimate hygiene

For hygiene reasons, the MAXTRA+ water filter contents are subject to special treatment with silver. A very small amount of silver may be transferred to the water. This transference would be within the World Health Organisation (WHO) guidelines.

Sensitive to potassium?

During the filtering process, there may be a slight increase in potassium content. However, one litre of BRITA filtered water contains less potassium than e.g. an apple. If you have kidney disease and/ or follow a potassium restricted diet, we recommend that you consult your doctor before using a BRITA water filter jug.

Natural traces

Like each natural product, the consistency of the BRITA Micro Carbon Pearls is subject to natural variances. This can lead to a slight abrasion of small carbon particles into your filtered water, noticeable as black bits. These particles have no negative health effects. If ingested, they will not harm the human body. In case you observe carbon particles, BRITA recommends to flush the water filter several times or until the black bits disappear.

Correctly dispose of BRITA Smart Light, BRITA Meter and BRITA Memo

The BRITA Smart Light and BRITA Memo contain a battery and have a life of approx. five years. At the end of their lives please remember that these devices must be disposed according to all applicable provision and regulations. To dispose of the exhausted BRITA Smart Light please remove it from the lid by turning it anti-clockwise. A1

To remove the exhausted BRITA Memo place a screwdriver in the notch next to the BRITA Memo and push it out. Please note that the BRITA Memo should not be removed for any other reason than to dispose of it.

WARNING

THIS PRODUCT CONTAINS BUTTON/COIN CELL BATTERIES

Button/coin cell batteries are hazardous and must be kept out of reach of children at all times even if they are old or no longer in use. These batteries can cause severe or fatal injuries in 2 hours or less if swallowed or placed inside any part of the body. If it is suspected a button/coin cell battery has been swallowed or placed inside any part of the body seek medical attention immediately or contact the Australian Poisons Information centre on 13 11 26 for 24/7 fast, expert advice.

Sustainability is important to us:

To prolong the life of our products we are happy to offer selected spare parts.

Please reach out to your BRITA customer service or local distributor for information on availability.

Exclusion of liability

Please understand that BRITA cannot accept any liability on their part if you do not follow the given usage instructions.

Dispose of the jug and water filter in accordance with local regulations.

ZH 繁體中文

I. 感謝您選擇 BRITA 優質產品，享受更純淨、口感絕佳的飲用水

MAXTRA+ 採用創新的 BRITA MicroFlow Technology 微流控制科技能確保更強大的濾水功效：

- 活性碳微粒子(Micro Carbon Pearl)是以天然椰殼為原料之活性碳所製成。透過 BRITA MicroFlow Technology 微流控制科技，濾芯中活性碳微粒子(Micro Carbon Pearl) 的數百萬個微孔，能有效過濾影響口感與氣味的物質（例如：氯）。
- 離子交換微粒(Ion Exchange Pearl)確保強大有效地減少水垢進而提供熱水壺或咖啡機可靠的防護。 *
- 有效減少可能經由老舊水管進入水中的鉛、銅等金屬物質。提供純淨好喝的飲用水*，您用來製作冷熱飲及烹煮食物都非常適合。

*此濾水器系統根據 DIN EN 17093:2018 的要求，對鉛、銅、氯和碳酸鹽硬度進行了測試。

可經由這套濾水系統去除或減少不應出現在居家用水中的汙染物質。

MAXTRA+ FlowControl: 微流控制: 達到完美濾水效能

MAXTRA+ FlowControl 微流控制科技，讓您不需長時間等待濾水壺過濾，同時享有最佳的濾水效果。

MAXTRA+ 濾芯的使用壽命

MAXTRA+ 濾芯壽命取決於當地水質（例如，水質硬度）。*/**

*效能取決於濾水器類型。

根據實際去除的氯與有機雜質數量來看，MAXTRA+ 濾芯最多可過濾 100 公 升硬水（以德國久質硬度 12 度至 14.5 度的碳酸鹽硬度為主要判斷依據）。

為確保最佳濾水效能，請務必每四週更換一次 MAXTRA+ 濾芯。BRITA 濾水 壺配備濾芯更換指示燈，可貼心提醒您下次更換濾芯的時間。

**根據 DIN 17093:2018 標準，經證實可於 120 公升濾水量內有效減少水垢。

超過 50 年濾水技術經驗，為您提供更安心的品質保證

50 多年以來，BRITA 始終秉持不斷創新與提供最高品質標準的濾水器解決方案。為確保 BRITA 達到最高品質要求，本公司設置嚴謹的內外部品質控管機制。知名的獨立檢驗機構 TÜV SÜD 定期控管家用濾水壺及濾芯的穩定品質。TÜV SÜD 檢驗機構依照德國及歐盟法令規範的標準，在檢測後頒予 BRITA 濾水壺和 MAXTRA+ 濾芯食用級品質認證。

滿意度 100%：BRITA 品質保證

BRITA 相信，這款產品必能滿足您對品質與過濾效能的要求。如果您對購買的 BRITA 產品不甚滿意，BRITA 保證在購買後 30 天內退費。請將濾水器連同收據一併寄給您當地的 BRITA 顧客服務部（詳見封底），並附上退貨原因、您的全名、電話號碼和銀行帳戶資訊。

30天內 滿意保證

II. 品質從根本做起

為確保您的 BRITA 濾水壺達到最佳濾水效果，請依照使用說明謹慎操作。

1初次使用全新 BRITA濾水壺及每次更換濾芯前的清潔說明

漏斗與水壺

可使用洗碗機清洗，濾水箱除外(水溫限制50°C)。

僅限使用冷水或常溫水並以手洗清潔 BRITA Flow。

如果您的 BRITA 濾水壺曾與可能造成變色（例如番茄醬、芥末）的食物接觸，請徹底清洗 BRITA 濾水壺。為了避免 BRITA 濾水壺變色，請勿在洗碗機中同時放入沾有上述食物的器皿。

上蓋配備 BRITA Smart Light 智慧顯示器 A1

使用洗碗機清洗上蓋前，請以逆時針方向旋轉，小心拆下BRITA Smart Light智慧顯示器。 A1

拆卸下的 BRITA Smart Light 智慧顯示器請勿放入洗碗機內清洗。拆下後，請將軟布沾濕，並將 BRITA Smart Light 智慧顯示器擦拭乾淨。完成清潔後，請以順時針方向轉緊，並將 BRITA Smart Light 智慧顯示器裝回上蓋。 A2

上蓋配備 BRITA Meter B

使用洗碗機清洗上蓋前，請將 BRITA Meter 拆下。按壓 BRITA Meter 兩側的扣板，並朝把手蓋後方傾斜，即可完全拆除。拆除的 BRITA Meter 請勿放入洗碗機內清洗。請用手洗方式清潔拆除的 BRITA Meter。

上蓋內嵌無法拆除的 BRITA Memo S

請勿將上蓋放入洗碗機內清洗。請以手洗方式清潔上蓋。

配備水龍頭的 BRITA 濾水壺 C

請以溫水沖洗水龍頭，並使用棉花棒或類似物品擦拭內部。請用手將接管螺帽轉緊，以確保不會漏水。轉動控桿下方的蓋子，輕鬆拆除水龍頭，即可清潔噴嘴及其他零件。

提示
請使用溫和的清潔劑，切勿使用腐蝕性清潔劑。若要清除上蓋上的水垢或 BRITA Meter 及 BRITA Smart Light 智慧顯示器，請使用一般家用檸檬酸水垢去除劑。

2 準備 MAXTRA+ 濾芯 D

您可以信賴的品質：BRITA 每顆 MAXTRA+ 濾芯皆經過蒸氣處理以確保出場衛生。拆卸 MAXTRA+ 濾芯保護袋 (請注意: MAXTRA+ 濾芯在經過蒸氣處理過程中可能受潮)。請在乾淨的水壺中注入冷水。將 MAXTRA+ 濾芯浸泡到冷水中並輕輕搖動去除氣泡。取出 MAXTRA+ 濾芯並將濾芯過濾器內的水倒掉。

3 安裝 MAXTRA+ 濾芯 E

將漏斗裝進水壺。將 MAXTRA+ 濾芯裝入漏斗凹槽並向下推至定位加以固定。

4 在 BRITA 濾水壺中注水

注水方式會因 BRITA 濾水壺不同款式的上蓋特色有所差異。漏斗會自動過濾注入的水，過濾後的水會順勢流入水壺中。

各種款式的上蓋

配備加水自動開蓋的 BRITA 濾水壺

若您的 BRITA 濾水壺是配備 BRITA Meter，請先將上蓋向後方掀起後，再將 BRITA Meter 裝入上蓋。將鉤扣置於「START」按鈕下方，並扣至上蓋的組裝夾具。將 BRITA Meter 向前傾斜，使其穩固「緊扣」至定位。 F

將上蓋扣至水壺內的組裝夾具，並向下按壓至把手位置。 G

將自來水注入BRITA 濾水壺。自來水的水流會啟動自動打開上蓋。水位達到上限時，自動加水上蓋會自動關閉。 H

各種款式的上蓋

配備按蓋式上蓋的 BRITA 濾水壺 I

將上蓋置於水壺上並小心地按壓直至定位。打開掀蓋式頂蓋，將開口對準水龍頭下方。將自來水注入 BRITA 濾水壺。

上蓋無特殊加水口設計的 BRITA 濾水壺 J

將上蓋拆下，將漏斗內裝滿水。將上蓋置於水壺上並按壓直至定位。

5 啟用 MAXTRA+ 濾芯 K

MAXTRA+ 濾芯使用前務必先將前兩次注滿過濾水倒掉。將開始2次注入過濾後的水，可倒掉或用來澆花。經過第3次注水過濾後，MAXTRA+ 濾芯即可開始正常使用。您將能享用更純淨可口的 BRITA 過濾好水。若碳微粒滲漏，請沖洗漏斗並重新裝入濾芯。如需有關碳微粒的詳細資訊，請參閱「重要須知」段落。

6 濾芯更換指示器調整

您的 BRITA 濾水產品濾芯更換指示器會提示您目前您需要更換 MAXTRA+ 濾芯。指示燈位於 BRITA 濾水壺的頂蓋。BRITA 建議您至少每四週更換一次 MAXTRA+ 濾芯，以確保發揮濾芯最佳效能。

各種款式的上蓋

裝置 BRITA Smart Light 智慧顯示器的 BRITA 濾水壺 L

BRITA Smart Light 智慧顯示器可確保您隨時能享用更純淨清新的 BRITA 過濾水。該裝置可監控過濾效能，自動提示濾芯更換時間，隨時保持濾芯最佳效能。顯示器的智慧感應器不僅能估算上次更換濾芯後經過的時間。也會將濾水量列入計算評估。在初次使用前和每次更換 MAXTRA+ 濾芯後開始使用濾水壺，請按住 BRITA Smart Light 智慧顯示器重置按鈕約 5-10 秒 M 待 LED 燈閃爍綠色3次後 N。現在您可以開始使用濾水壺了。

每次使用濾水壺時，BRITA Smart Light 智慧顯示器都會透過不同顏色燈號的閃爍，提示您濾芯目前狀態。

綠燈：MAXTRA+ 濾芯處於最佳過濾效能。

黃燈：接近更換濾芯的時機，請準備新的濾芯。

紅燈：請立即更換濾芯。正常注水流速下，此狀態會在使用四週或濾水量達 100 公升後顯示。*

*效能取決於濾水器類型。

您可以隨時監控過濾效能狀態。只要按下 BRITA Smart Light 智慧顯示器按鈕，及可檢視實際過濾狀態。 M N

配備 BRITA Meter 的 BRITA 濾水壺 O

有了智慧型 BRITA Meter，就能隨時享用純淨可口的 BRITA 過濾水。BRITA Meter 可監控過濾效能並顯示剩餘的濾芯壽命。此功能將濾水量、水質（硬度）及時間三種量測方式列入考量。啟用 MAXTRA+ 濾芯後，請撕除 BRITA Meter 顯示器的保護膜，然後按住「START」按鈕約六秒，直到顯示器出現四個長條圖示為止。顯示器開始閃爍時，即可啟開按鈕。 P

只要顯示器顯示「O.K.」，即表示 MAXTRA+ 濾芯處於最佳過濾效能狀態。顯示器中，每個長條圖示的百分比代表 MAXTRA+ 濾芯的剩餘容量。若出現水滴由上而下反覆滴落的閃爍狀態，即表示系統正在運水。如果清空濾水壺的符號「NEW」閃爍，您應該馬上更換 MAXTRA+ 濾芯。 Q

裝置 Memo 的 BRITA 濾水壺 R S

BRITA Memo 每四週會提醒您更換 MAXTRA+ 濾芯。啟用 MAXTRA+ 濾芯後，請撕除 Memo 顯示器的保護膜，然後按下「START」按鈕，直到顯示器出現四個長條圖示並閃爍兩次為止。若顯示器右下角出現閃爍的小點，即表示 BRITA Memo 正在運作。每個長條圖示約莫代表一週的使用時間。顯示四個 100% 長條圖示，等同於 MAXTRA+ 濾芯為期四週的建議更換週期。每經一週就會有一個長條圖示消失，由此可知 MAXTRA+ 剩餘的濾芯壽命。當所有長條圖示皆已消失，且箭頭開始閃爍時，請更換 MAXTRA+ 濾芯。

7 MAXTRA+ 濾芯的更換 T

將 MAXTRA+ 濾芯取出。依照「品質從根本做起」中步驟 1 至 6 的指示操作。

III. 重要須知

請勿將 BRITA 濾水壺置於陽光底下直接曝曬。請讓 BRITA 濾水壺遠離熱源，例如烤箱、咖啡機。請將 BRITA 濾水壺放置在陰涼處。

BRITA 過濾水僅供人飲用。過濾水屬於易腐壞的食物，請於一天內飲用完畢。

請確認手邊隨時備有新的 MAXTRA+ 濾芯可供更換。BRITA 建議您將未拆封的 MAXTRA+ 濾芯存放於乾燥陰涼的地方。

BRITA 濾水壺使用期間，上蓋與自動注水用上蓋可能會有水垢堆積。這是因為濾水壺必須經常接觸未過濾水，水中含有碳酸鹽硬度物質(水垢)所致。BRITA 建議您定期使用一般家用檸檬酸水垢去除劑，清除上蓋、BRITA Smart Light 智慧顯示器、BRITA Meter 及自動加水用上蓋上的水垢。萬一您不慎掉落 BRITA Smart Light 智慧顯示器，請檢查是否損壞，若有明顯損壞，請予以更換。若須丟棄損壞零件，請遵循所有適用條款規範。請將 BRITA Smart Light 智慧顯示器 及濾芯放置無法取得的地方（以免意外吞食）。若長時間不使用 BRITA 濾水壺（例如假日），建議您取出 BRITA 濾水壺中的 MAXTRA+ 濾芯，將剩餘的過濾水倒掉，再將濾芯輕輕放回原處（不須固定）。恢復使用 BRITA 濾水壺前，請取出 MAXTRA+ 濾芯，清潔濾水壺後，重新執行「品質從根本做起」的步驟 3 至 5。請

最佳效能

僅限過濾常溫自來水。

若為先過濾後煮沸

BRITA 濾水壺僅限過濾市政當局處理後的自來水 (附註：水質經過定期監控且符合法律規範，能安全飲用），或是私人供應水 (經測試可安全飲用)。如果根關單位指示主要用水須煮沸才能飲用，即表示 BRITA 過濾水亦必須煮沸。如果當局政府對於煮沸自來水的指示失效，請務必徹底清潔 BRITA 濾水壺，並換上新的 MAXTRA+ 濾芯。對於部分人士（例如免疫功能失調者或嬰兒），一般建議應將 BRITA 過濾水煮沸再飲用。無論過濾水用途為何，請使用不鏽鋼器皿或附有隱藏元件的水壺盛裝。請特別注意，若飲水者對鎳金屬過敏，請使用不鏽鋼製器具或附有隱藏元件的水壺盛裝。

極致衛生

為確保水質衛生，MAXTRA+ 濾芯皆經過銀金屬特別處理。可能會有極少量的銀金屬成分滲入水中。此滲透量符合世界衛生組織 (WHO) 的標準。

對銀金屬過敏？

過濾期間，水中可能會滲入少量的銀金屬成分。不過，一公升 BRITA 過濾水中所含的銀金屬其實少於一顆蘋果（舉例）的金屬。若您患有腎臟疾病，及/或需依指示攝取低銀成分飲食，建議您在使用 BRITA 濾水壺前先詢問主治醫師。

天然微粒

如同所有天然產品，BRITA 活性碳微粒子 (Micro Carbon Pearls) 的耐用度可能會因天然因素而不盡相同。由於可能會有少量小型碳微粒滲入濾水中，因此水中難免會發現黑色小點。這些微粒不會對健康產生任何影響。如不慎飲用，不會對人體造成任何傷害。如發現水中含有碳微粒，BRITA 建議反覆沖洗濾芯數次，或沖洗至黑色微粒消失止。

若須丟棄 BRITA Smart Light 智慧顯示器、BRITA Meter 與 BRITA Memo，請依規定妥善處理。

BRITA Smart Light 智慧顯示器及 BRITA Memo，皆配備電池，使用壽命約5年。達到使用壽命期限時，請務必遵循各項適用條款規範丟棄這些裝置。如須丟棄使用期限結束的 BRITA Smart Light 智慧顯示器，請以逆時針方向旋轉，從上蓋卸除裝置 A1。

如須卸除使用期限結束的 BRITA Memo，請將螺絲起子插入 BRITA Memo 旁的凹槽處，按壓便其退出。請注意，若非必須丟棄，請勿任意卸除 BRITA Memo。

永續發展對於我們來說很重要：

請參閱當地提供構道備用零件來延長我們產品的使用壽命。

請聯絡您的 BRITA 碧然德顧客服務部或當地經銷商瞭解進一步的資訊。

免責聲明

請注意，若您未遵循本使用說明操作產品，BRITA 將不承擔任何責任。

請根據當地法規處理水壺和濾水器。

TH

I. ขอขอบคุณที่เลือก BRITA เพื่อน้ำที่กรองที่สะอาดกว่าและมีรสชาติดีขึ้น

นวัตกรรม BRITA MicroFlow Technology ใน MAXTRA+ ที่มั่นใจได้ในการกรองที่เปี่ยมประสิทธิภาพ

- Micro Carbon Pearls ขนาดเล็กทำจากคาร์บอนจากกะลามะพร้าวธรรมชาติ ด้วย BRITA MicroFlow Technology ช่วยในสารที่ส่งผลต่อกลิ่นและรสชาติของน้ำ เช่น คลอรีน ถูกกัก ไว้อย่างมีประสิทธิภาพด้วยรูพรุนเล็ก ๆ หลายล้านช่องภายในไส้กรอง Micro Carbon Pearls ของไส้กรอง
- Ion-Exchange Pearls ช่วยรับประกันการลดตะกรันหินปูนได้อย่างมีประสิทธิภาพ เพื่อการปกป้องกาต้มน้ำหรือเครื่องชงกาแฟได้เป็นอย่างดี*
- การดูดซับโลหะหนัก เช่น สารตะกั่ว ทองแดง ที่อาจปนเปื้อนมาจากระบบท่อประปาเก่า เพื่อให้ได้น้ำดื่มที่ใสสะอาดและสะดุดลิ้นสำหรับเครื่องดื่มร้อนและเย็น และสำหรับการปรุงอาหารของคุณ*

*ระบุบเครื่องกรองน้ำนี้ได้รับการทดสอบสารตะกั่ว ทองแดง คลอรีน และความกระด้างของเกลือคาบอนเตตมามาตรฐาน DIN EN 17093:2018

สารปนเปื้อนหรือสารเคมีอื่น ๆ ที่ไม่ควรอยู่ในน้ำดื่มของคุณ จะถูกขจัดออกหรือลดปริมาณลงมาก ด้วยระบบการกรองน้ำนี้

MAXTRA+ FlowControl: การกรองที่ดีเยี่ยม

MAXTRA+ FlowControl ช่วยให้มั่นใจว่ามีเวลาในการกรองอย่างเหมาะสมเพื่อให้ได้ผลลัพธ์ดีเยี่ยม ด้วยการผสมผสานของไส้กรอง MAXTRA+ และกรวยของเหยือกกรองน้ำ BRITA

การใช้งานของไส้กรอง MAXTRA+

อายุการใช้งานของไส้กรอง MAXTRA+ ขึ้นอยู่กับคุณภาพน้ำในท้องถิ่น เช่น ความกระด้างของน้ำ

ไส้กรอง MAXTRA+ สามารถกรองน้ำกระด้างได้สูงสุด 150 ลิตร */**

*ประสิทธิภาพขึ้นอยู่กับชนิดของเครื่องกรองน้ำ

เพื่อให้มั่นใจถึงประสิทธิภาพการทำงานที่ดีเยี่ยม คุณควรเปลี่ยนไส้กรอง MAXTRA+ ทุก ๆ สี่สัปดาห์ เพื่อแจ้งเตือนคุณเกี่ยวกับการเปลี่ยนเครื่องกรองครั้งต่อไป เหยือกกรองน้ำ BRITA จึงติดตั้งไฟแจ้งเตือนการเปลี่ยนไส้กรอง

**ผ่านการรับรองว่าลดการเกิดตะกรันหินปูนลงสำหรับน้ำ 120 ลิตร ตามมาตรฐาน DIN 17093:2018

รับประกันคุณภาพด้วยประสบการณ์ยาวนานกว่า 50 ปี

ด้วยประสบการณ์นานกว่า 50 ปี BRITA ได้สร้างนวัตกรรมอย่างต่อเนื่องและนำเสนอผลิตภัณฑ์ของเครื่องกรองน้ำที่มีคุณภาพสูงสุด เพื่อให้เป็นไปตามขอกำหนดคำนคุณภาพสูงที่ BRITA เรางดืมาตรการควบคุมคุณภาพที่เข้มงวดทั้งภายในและภายนอก TÜV SÜD องค์กรอิสระซึ่งมีชื่อเสียง ทำหน้าที่ควบคุมคุณภาพเหยือกกรองน้ำและไส้กรองน้ำที่ใช้ในครัวเรือน TÜV SÜD รับรองคุณภาพของเหยือกกรองน้ำ BRITA และไส้กรอง MAXTRA+ ว่ามีคุณภาพในระดับเดียวกับอาหารและเป็นไปตามกฎหมายของยุโรปและเยอรมัน

II. คุณภาพพับแต่จุดเริ่มต้น

เพื่อให้แน่ใจว่าคุณจะได้รับผลลัพธ์ที่ดีที่สุดจากเหยือกกรองน้ำ BRITA โปรดปฏิบัติตามคำแนะนำอย่างเครงครัด

1 ทำความสะอาดเหยือกกรองน้ำ BRITA ใบใหม่ของคุณตามคำแนะนำก่อนที่จะใช้ครั้งแรกและทุกครั้งที่เปลี่ยนไส้กรอง

กรวยและเหยือกน้ำ

สามารถล้างในเครื่องล้างจานได้ (อุณหภูมิสูงสุด 50 °C) ยกเว้นผลิตภัณฑ์ BRITA Flow ทำความสะอาด BRITA Flow ด้วยมือจากน้ำเย็นโดยใช้น้ำเย็นหรือน้ำอุ่น

ถ้าเหยือกกรองน้ำ BRITA ของคุณเส้นผัสกับอาหารซึ่งมีแนวโน้มว่าจะทำให้เปลี่ยนสี (เช่น ซอสมะเขือเทศมัสตาร์ด) ควรทำความสะอาดเหยือกกรองน้ำ BRITA ของคุณ เพื่อหลีกเลี่ยงไม่ให้เหยือกกรองน้ำ BRITA ของคุณเปลี่ยนสี อย่าใส่ลงในเครื่องล้างจานที่มีถ้วยชามและตะกรานอาหาร

ฝาที่มี BRITA Smart Light A1

ก่อนจะใส่ฝาปิดลงในเครื่องล้างจานเพื่อทำความสะอาด โปรดถอด BRITA Smart Light ออกจากฝาก่อนโดยการหมุนทวนเข็มนาฬิกา A1

อย่าใส่ BRITA Smart Light ที่ถอดออกมานี้ ลงในเครื